Bending formers and back formers

Accessories for REMS Curvo 50,
REMS Curvo and REMS Sinus

Bending formers and back formers, 180°, form and pressure resistant, in high-strength, high-slide, glass-fibre reinforced polyamide 90° (Ø 35 R 100, Ø 42 R 140, Ø 50 R 135, Ø 1" R 100, Ø 1¼" R 140). Optimum matching of bending former and back former guarantees material-compatible gliding without cracks and creases. Angle scale provided on each bending former and mark on the back former ensure precise bending. Rapid change of bending formers and back formers.

Bending former and back former for pipes Ø mm/inch O.D.	R mm	X mm	Cu				Cu-U				St 10217				St 10305-U				St 10305				St 10255				St 50086				V				Art.-No.
			REMS Sinus	REMS Curvo	REMS Akku-Curvo	REMS Curvo 50	REMS Sinus	REMS Curvo	REMS Akku-Curvo	REMS Curvo 50	REMS Sinus	REMS Curvo	REMS Akku-Curvo	REMS Curvo 50	REMS Sinus	REMS Curvo	REMS Akku-Curvo	REMS Curvo 50	REMS Sinus	REMS Curvo	REMS Akku-Curvo	REMS Curvo 50	REMS Sinus	REMS Curvo	REMS Akku-Curvo	REMS Curvo 50	REMS Sinus	REMS Curvo	REMS Akku-Curvo	REMS Curvo 50	REMS Sinus	REMS Curvo	REMS Akku-Curvo	REMS Curvo 50	
10	40	45	●	●	●	●[2]													●	●	●	●[2]													581400
12	45	49	●	●	●	●[2]					●	●	●	●[2]					●	●	●	●[2]													581410
14, 10 U, ¼ (DN 6)	50	53	●	●	●	●[2]	●	●	●	●[2]									●	●	●	●[2]		●	●	●[2]					●	●	●	●[2]	581420
15, 12 U	55	56	●	●	●	●[2]					●	●	●	●[2]	●	●	●	●[2]	●	●	●	●[2]													581430
16, 12 U	60	62	●	●	●	●[2]	●	●	●	●[2]									●	●	●	●[2]					●	●	●	●[2]	●	●	●	●[2]	581440
17, 15 U	56	60													●	●	●	●[2]													●	●	●	●[2]	581110
18, 14 U, 15 U, ⅜ (DN 10)	70	75	●	●	●	●[2]	●	●	●	●[2]	●	●	●	●[2]					●	●	●	●[2]	●	●	●	●[2]					●	●	●	●[2]	581450
20, 16 U, 18 U	75	80	●	●	●	●[2]	●	●	●	●[2]					●	●	●	●[2]									●	●	●	●[2]	●	●	●	●[2]	581080
22, 18 U, ½ (DN 15)	77	81	●	●	●	●[2]	●	●	●	●[2]		●	●	●[2]					●	●	●	●[3]		●	●	●[2]									581460
22, 18 U, ½ (DN 15)	88	91		●	●	●[2]		●	●	●[2]		●	●	●[2]						●	●	●[2]													581470
24, 22 U	75	85		●	●	●[2]										●	●	●[2]																	581130
25	98	103		●	●	●[2]														●	●	●[2]						●	●	●[2]	●	●	●	●[2]	581180
26	98	108																		●	●	●[2]									●	●	●	●[2]	581270
28, ¾ (DN 20)	102[1]	108		●	●	●[2]						●	●	●[2]										●		●[2]									581070
28, ¾ (DN 20)	102	110										●	●	●[2]						●	●	●[2]		●		●[2]									581260
28, ¾ (DN 20)	114	120		●	●	●[2]						●	●	●[2]						●	●	●[2]		●		●[2]									581310
30, 28 U	98[1]	105		●		●[2]										●	●	●[2]																	581150
32	98	110																													●	●	●	●[2]	581280
32	114	121		●		●[2]																						●		●		●	●	●[2]	581320
35	100	105				●[3]								●[3]								●[3]													581500
35	140	150		●		●[2]																													581350
40	140	148																														●		●[2]	581330
42	140	155				●[3]								●[3]								●[3]													581510
50	135	143																																●[3]	581540
⅜" (9,5 mm)	43	48	●	●	●	●[2]																													581200
½" (12,7 mm)	52	60	●	●	●	●[2]																													581210
⅝" (15,9 mm)	63	70	●	●	●	●[2]																													581220
¾" (19,1 mm)	75	82	●	●	●	●[2]																													581230
⅞" (22,2 mm)	98	107	●	●	●	●[2]																													581240
1" (33,7 mm)	100	105																								●[3]									581520
1" (25,4 mm)	101	112		●	●	●[2]																													581370
1⅛" (28,6 mm)	102	110		●	●	●[2]						●	●	●[2]						●	●	●[2]		●		●[2]									581260
1⅛" (28,6 mm)	115	117		●	●	●[2]																													581380
1¼" (31,8 mm)	114	123		●		●[2]																													581320
1¼" (31,8 mm)	133	145		●		●[2]																													581390
1¼" (42,4 mm)	140	150																								●[3]									581530
1⅜" (34,9 mm)	140	150		●		●[2]																													581350

R mm — Bending radius mm at the neutral axis of the bend (DVGW GW 392)
X mm — Correction dimension mm
[1] According to DVGW work sheet GW 392 minimum bending radius of 114 mm required for copper tubes Ø 28 mm. Wall thickness ≥ 0,9 mm
[2] Adaptor block 10–40, support 10–40 (Art.-No. 582120) necessary.
[3] Adaptor block 35–50, support 35–50 (Art.-No. 582110) necessary.
Cu: hard, half-hard, soft copper tubes, also thin-wall, EN 1057
St 10217: stainless steel pipes of the pressfitting systems EN 10217-7 (DIN 2463)
St 10305-U: coated carbon steel pipes of the pressfitting systems EN 10305-3 (DIN 2394)
St 10305: soft precision steel pipes EN 10305-1, EN 10305-2, EN 10305-3 (DIN 2391–2394), carbon steel pipes EN 10305-3 (DIN 2394)
St 10255: Steel pipes (threaded pipes) EN 10255 (DIN 2440)
St 50086: Electrical installation pipes DIN EN 50086
U: coated
V: multi-layer composite tubes of pressfitting systems

No cracks or wrinkles shall occur during professional cold bending. Pipe qualities and sizes which do not guarantee this are not suited to be bent with REMS Sinus, REMS Curvo, REMS Curvo 50 and REMS Akku-Curvo.

Bending to size
If a bend is required at a certain point on the pipe, a length correction must be made to suit the pipe size. For a 90° bend, the correction dimension X given in Fig. 1 must be taken into account. The set dimension L must be reduced by the amount X here. If, e.g., the dimension L for pipe size 22 is 400 mm and a bend with a bending radius of 77 mm is to be made, the dimension line should be marked on the pipe at 319 mm. This line is then – as shown in Fig. 1 – to be aligned with the 0-mark on the bending former.

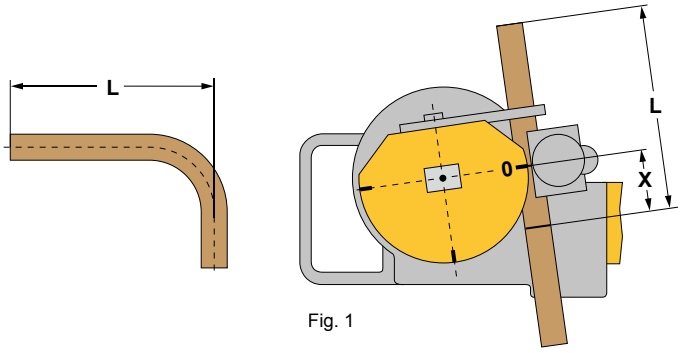

Fig. 1

Ташев-Галвинг ООД
www.tashev-galving.com